Pipe

Floor

Pipe Medium

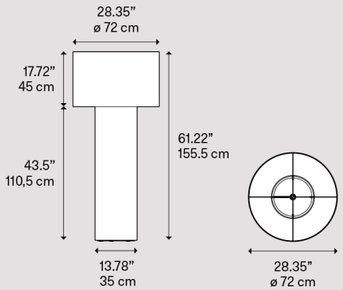

Light source Sorgente luminosa	Structure Montatura	Diffuser Diffusore
LED E27 2 max 25W	—	White Black
LED Medium Base 2 max 25W	—	White Black

BULBS not included
LAMPADINE non incluse

Net Weight/ Peso Netto: 9 kg | Pack/ Colli: 3

IP20 | Energy Saving | Dim

Floor

Pipe Large

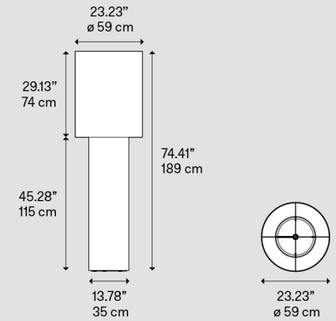

Light source Sorgente luminosa	Structure Montatura	Diffuser Diffusore
LED E27 2 max 25W	—	White Black
LED Medium Base 2 max 25W	—	White Black

BULBS not included
LAMPADINE non incluse

Net Weight/ Peso Netto: 8.5 kg | Pack/ Colli: 3

IP20 | Energy Saving | Dim

Materials	Linen diffuser Diffusore in lino
Colors	White Black
Light	Lamp providing diffused light Two commercial light bulb sockets Lampada a luce diffusa Predisposizione per due lampadine commerciali